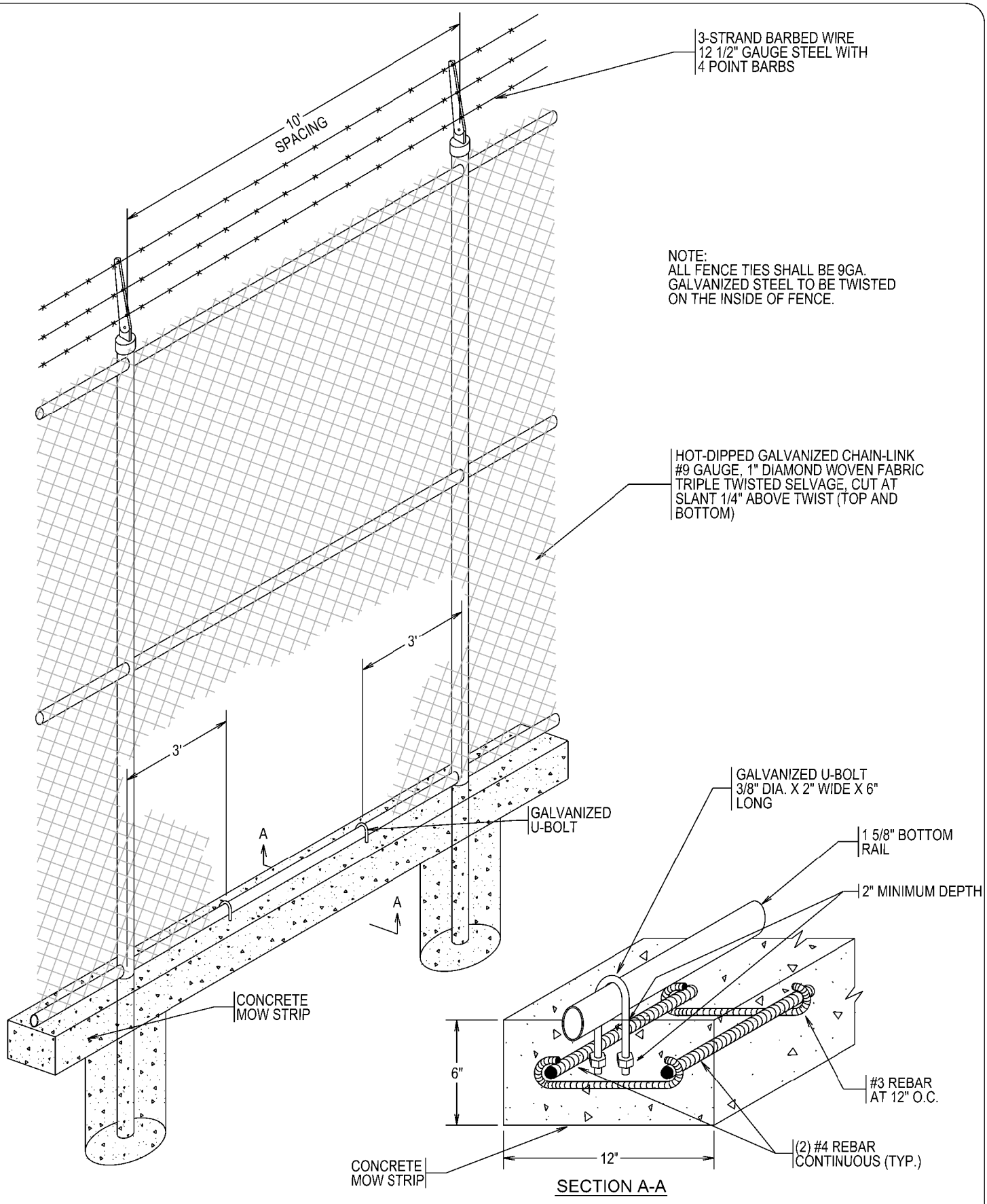

DD-903-17	SAN ANTONIO WATER SYSTEM SAN ANTONIO, TEXAS	APPROVED: MARCH 2011
SHEET 2 OF 2	FENCE DETAILS	REVISED: FEB 2017